Introduction to Fluid Motion

This chapter discusses the analysis of fluid in motion - fluid dynamics. It is useful to introduce some definitions about fluid motion.

Mass flow rate (ṁ): is the mass per time taken to accumulate this mass, $\dot{m} = \frac{dm}{dt}$

***Volume flow rate-Discharge* (Q),** $Q = \frac{Volume\ of\ fluid}{time}$

Uniform flow: If the flow velocity is the same magnitude and direction at every point in the fluid it is said to be uniform.

Non-uniform: If at a given instant, the velocity is not the same at every point the flow is non-uniform.(In practice, by this definition, every fluid that flows near a solid boundary will be non-uniform – as the fluid at the boundary must take the speed of the boundary, usually zero. However if the size and shape of the of the cross-section of the stream of fluid is constant the flow is considered uniform.)

Steady flow: A steady flow is one in which the conditions (velocity, pressure and cross-section) may differ from point to point but DO NOT change with time.

Unsteady flow: If at any point in the fluid, the conditions change with time, the flow is described as unsteady. (In practice there is always slight variations in velocity and pressure, but if the average values are constant, the flow is considered steady.

Combining the above we can classify any flow in to one of the following four types:

1.*Steady uniform flow*. Conditions do not change with position in the stream or with time. An example is the flow of water in a pipe of constant diameter at constant velocity.

2. *Steady non-uniform flow*. Conditions change from point to point in the stream but do not change with time. An example is flow in a tapering pipe with constant velocity at the inlet - velocity will change as you move along the length of the pipe toward the exit.

3. *Unsteady uniform flow*. At a given instant in time the conditions at every point are the same, but will change with time. An example is a pipe of constant diameter connected to a pump pumping at a constant rate which is then switched off.

4. *Unsteady non-uniform flow*. Every condition of the flow may change from point to point and with time at every point. For example waves in a channel.

Compressible and Incompressible Flow

All fluids are compressible - even water - their density will change as pressure changes. Under steady conditions, and provided that the changes in pressure are small, it is usually possible to simplify analysis of the flow by assuming it is incompressible and has constant density. As you will appreciate, liquids are quite difficult to compress - so under most steady conditions they are treated as incompressible. In some unsteady conditions very high pressure differences can occur and it is necessary to take these into account- even for liquids. Gasses, on the contrary, are very easily compressed, it is essential in most cases to treat these as compressible, taking changes in pressure into account.

Three Dimensional Flow

Although in general all fluids flow three-dimensionally, with pressures and velocities and other flow properties varying in all directions, in many cases the greatest changes only occur in two directions or even only in one. In these cases changes in the other direction can be effectively ignored making analysis much more simple.

Flow is one dimensional if the flow parameters (such as velocity, pressure, depth etc.) at a given instant in time only vary in the direction of flow and not across the cross-section. The flow may be unsteady, in this case the parameter vary in time but still not across the cross-section. An example of one-dimensional flow is the flow in a pipe. Note that since flow must be zero at the pipe wall - yet non-zero in the center – there is a difference of parameters across the cross-section. Should this be treated as two-dimensional flow? Possibly - but it is only necessary if very high accuracy is required. A correction factor is then usually applied.

Ideal Flow: frictionless ($\mu = 0$) and incompressible.

Real Flow: $\mu \neq 0$

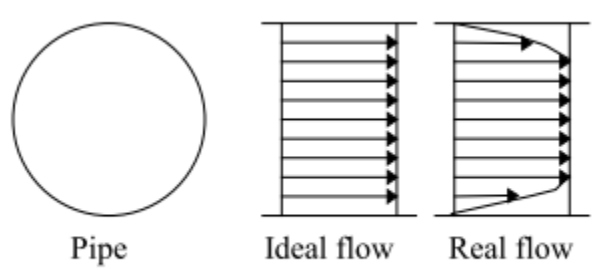

One dimensional flow in a pipe.

Adiabatic flow: fluid flow in which no heat is transferred to or from the fluid

Adiabatic + frictionless = isentropic

Laminar Flow: fluid particles move along smooth path in laminas (or layers). Laminar flow is governed by Newton's law of viscosity:

Turbulent Flow: Fluid particles move in very irregular paths.

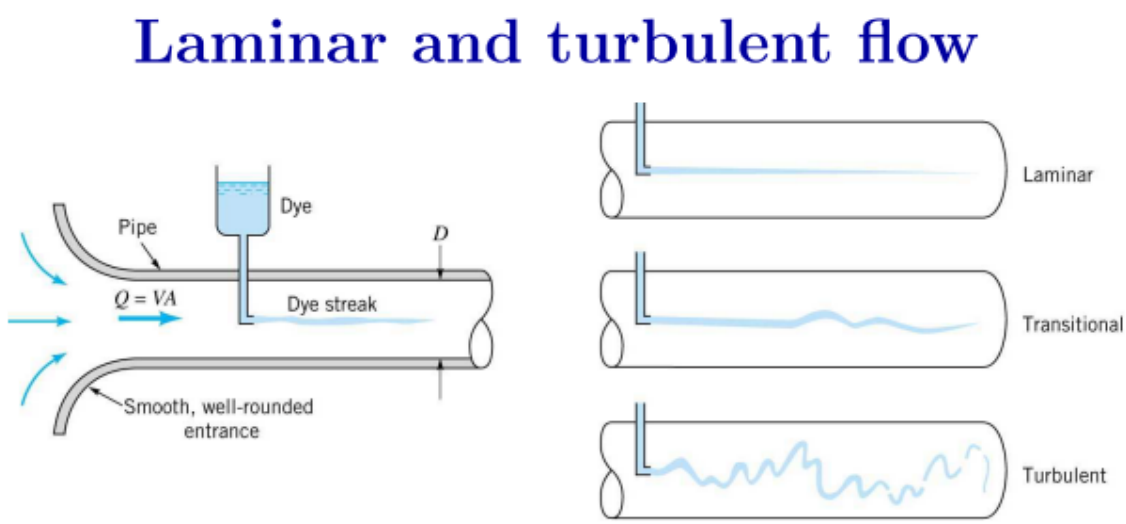

Control Volume and Conservations Laws

The control volume was "an imagined spatial volume having certain characteristics and introduced for purposes of analysis" of fluid mechanics. The concept was later expanded to aid in thermodynamic analysis.

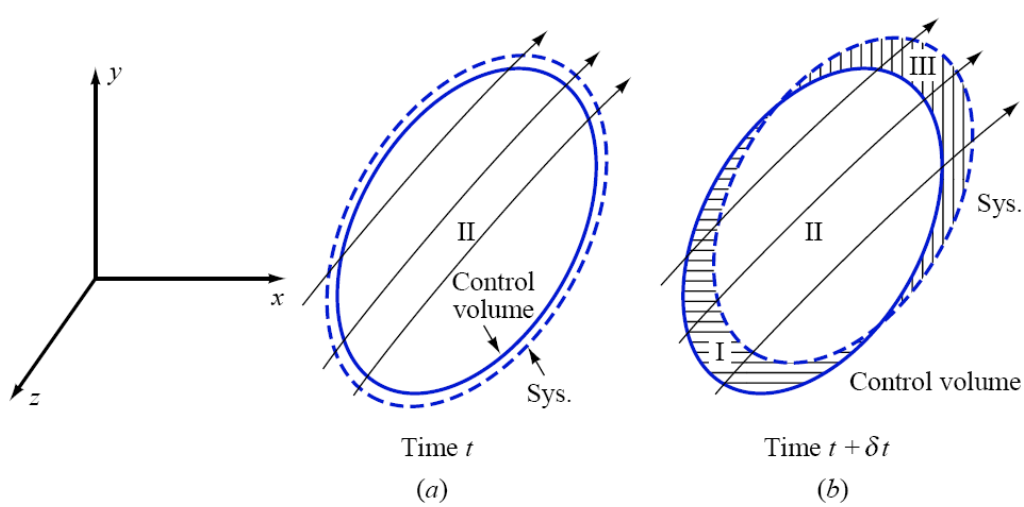

A control volume is defined as a region of three dimensional space selected for the purposes of analysis and on which specific fundamental physical laws can be applied. Around this volume of space is a control surface. That surface is an imaginary, infinitely thin 2 dimensional surface. The purpose of the control surface is to aid in identifying mass and energy which act on the control volume.

When applying control volumes to fluid dynamics, flow is allowed to enter or leave the volume, resulting in changes to momentum, kinetic energy and other physically measurable properties internal to the volume. When applying control volumes to thermodynamics, this flow influences the internal energy of the volume and other properties of the fluid's physical state. Heat and work are also accounted for when they are found to cross the control surface.

$$\frac{dN}{dt} = \frac{\partial}{\partial t}\int_{cv} \beta\rho \, d\forall + \int_{cs} \beta\rho V \cdot dA$$

N: the total amount of some property (mass, energy or momentum), β the amount of this property per unit mass, $\beta = \frac{N}{mass}$.

1- CONSERVATION OF MASS (CONTINUITY EQUATION)

$$\beta = \frac{m}{m} = 1, \ \frac{dN}{dt} = \frac{dm}{dt} = 0 \ (for\ steady\ state)$$

$$0 = \int_{cs} \rho V dA = \int_{in} \rho_1 V_1 dA_1 + \int_{out} \rho_2 V_2 dA_2$$

$$0 = -\rho_1 V_1 A_1 + \rho_2 V_2 A_2$$

$\boldsymbol{\rho_1 V_1 A_1 = \rho_2 V_2 A_2 \quad or \quad \dot{m}_1 = \dot{m}_2}$ (Continuity equation).

For incompressible flow, $\rho_1 = \rho_2$, hence,

$\boldsymbol{V_1 A_1 = V_2 A_2 \quad or \quad Q_1 = Q_2}$

***Example*:** A 10 kg/s of water flows through a main pipe. The pipe branches to two pipes, 10 cm-diameter and 20 cm diameter. Find the mass flow rate and velocity at each branch if you know that the water velocity in the 10 cm branch is 0.5 m/s

Notes:

The appearing V in the equations above is the ***mean*** velocity V_{mean}

- For ideal fluid in pipe, $Q = AV_{mean}$
- For real fluid in pipe, $Q = AV_{mean} = \int_0^{ro} V(r)dA$

$$\therefore V_{mean} = \frac{Q}{A} = \frac{\int_0^{ro} V(r)dA}{\pi\, r_o^2}$$

H.W: Determine the mean and maximum velocities for a fluid flow inside pipe according to the velocity profile: $V = \left(1 - \left(\frac{r}{r_o}\right)\right)^2$

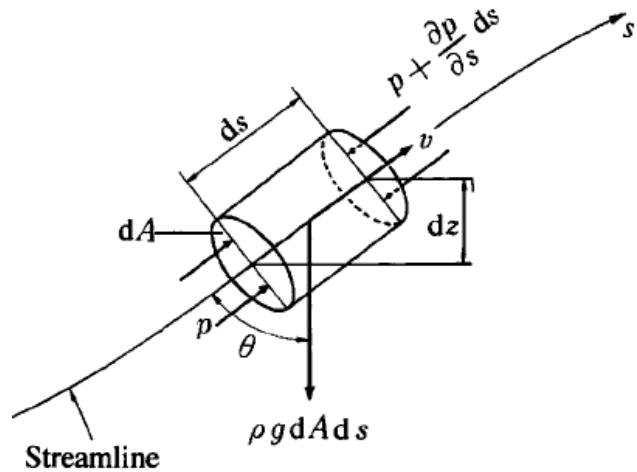

2- CONSERVATION OF ENERGY

Applying Newton's 2nd law along S-direction:

$ma = \sum Fs$

(Assuming steady, incompressible, nun-viscous)

$$\rho dAdS\frac{dV}{dt} = pdA - \left(P + \frac{\partial P}{\partial S}dS\right)dA - \gamma dAdS\, cos\theta$$

$$\frac{dV}{dt} = -\frac{1}{\rho}\frac{\partial P}{\partial S} - g\frac{dZ}{dS} \qquad (1)$$

$$dV = \frac{\partial V}{\partial t}dt + \frac{\partial V}{\partial S}dS$$

$$\frac{dV}{dt} = \frac{\partial V}{\partial t} + \frac{\partial V}{\partial S}\frac{dS}{dt}$$

$$\frac{dV}{dt} = \frac{\partial V}{\partial t} + \frac{\partial V}{\partial S}V \qquad (2)$$

Equ (1) = Equ. (2) $\rightarrow -\frac{1}{\rho}\frac{\partial P}{\partial S} - g\frac{dZ}{dS} = \frac{\partial V}{\partial t} + \frac{\partial V}{\partial S}V$

For steady state, $\frac{\partial V}{\partial t} = 0$

$$V\frac{dV}{dS} = -\frac{1}{\rho}\frac{dP}{dS} - g\frac{dZ}{dS} \qquad (3)$$ Euler's Equation

Integrating equ (3) along S and assuming incompressible flow:

$$\int V\frac{dV}{dS} + \int \frac{1}{\rho}\frac{dP}{dS} + \int g\frac{dZ}{dS} = 0$$

$$\frac{V^2}{2} + \frac{P}{\rho} + gz = const. \qquad (4)$$

$V^2/2$: (J/kg) is the kinetic energy

P/ρ : (J/kg) is the flow energy

gz (J/kg) is the potential energy

Note that, equation (4) can be written in other forms, by dividing it by g or multiplying it by ρ.

$$\frac{V^2}{2g} + \frac{P}{\rho g} + z = const$$ (Bernoulli equation)

$V^2/2g$ (m): velocity head (m)

P/ρg (m): pressure head

Z (m): potential head

Total energy is always constant

$$\frac{1}{2}\rho V^2 + P + \gamma z = const$$

$\frac{1}{2}\rho V^2$ (Pa): dynamic pressure

P (Pa): static pressure

γz (Pa): pressure due to elevation

Definitions:

Total pressure: is the summation of static, dynamic, elevation pressures, $P_t = P + ½ \rho V^2 + gz$

Piezometric pressure: is the summation of static and elevation pressure, Pz = P + gz

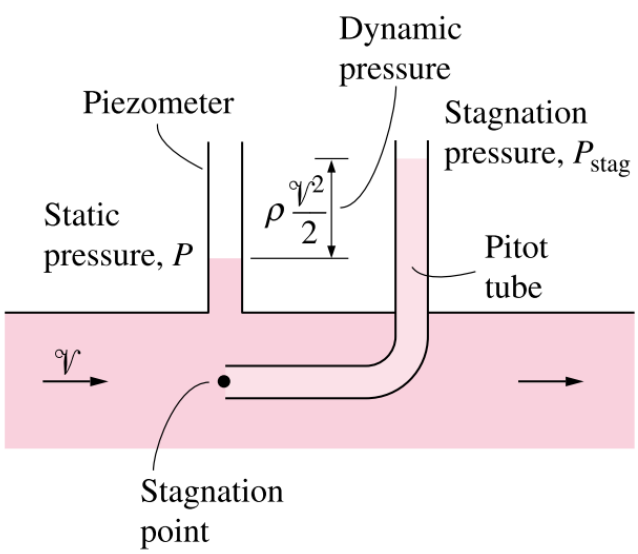

Measurement of static and total pressures

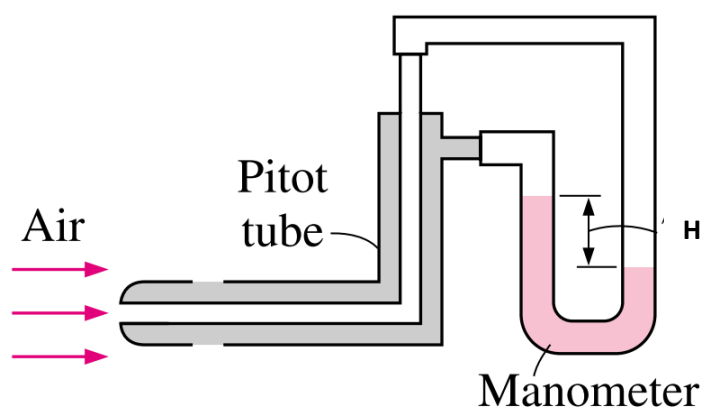

Pitot Tube

H.W: For the tube shown in figure, derive a relation for the velocity of air at point A.

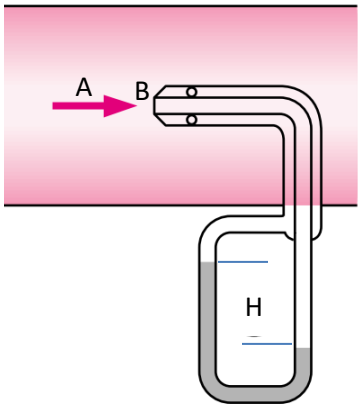

Ex: The system shown in figure discharges gasoline (ρ = 680 kg/m^3) to atmosphere at a rate of 12 kg/s. Calculate the pressure P_1.

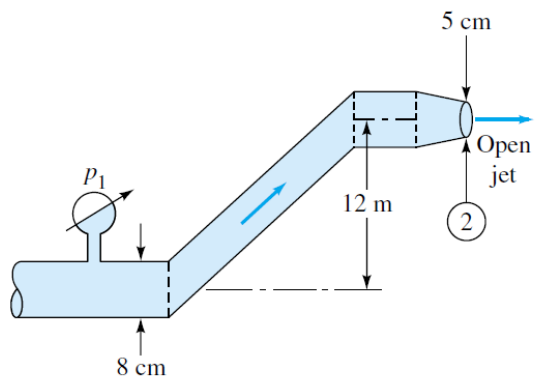

Example: Derive the flow rate relation through venturi meter for air. Then determine the manometer reading h, where S = 0.8

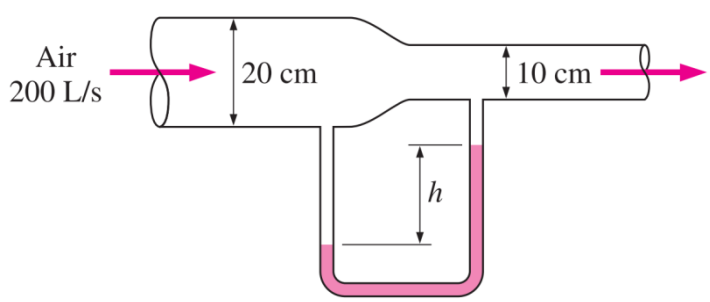

Applications of Bernoulli Equation

1- Pump system

$$\frac{V_1^2}{2g} + \frac{P_1}{\rho g} + z_1 + hp = \frac{V_2^2}{2g} + \frac{P_2}{\rho g} + z_2$$

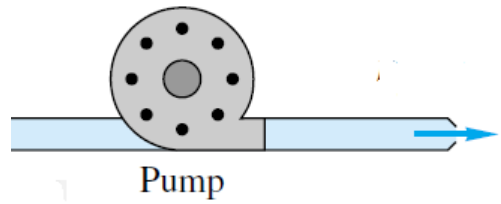

hp: is the pressure head generated by the pump (m)

the pump efficiency is given by:

$$\eta_p = \frac{output\ power}{input\ power} = \frac{\gamma Q h_p}{W_p}$$

2- Turbine system

$$\frac{V_1^2}{2g} + \frac{P_1}{\rho g} + z_1 - ht = \frac{V_2^2}{2g} + \frac{P_2}{\rho g} + z_2$$

h_t: is the pressure head supplied to the turbine (m)

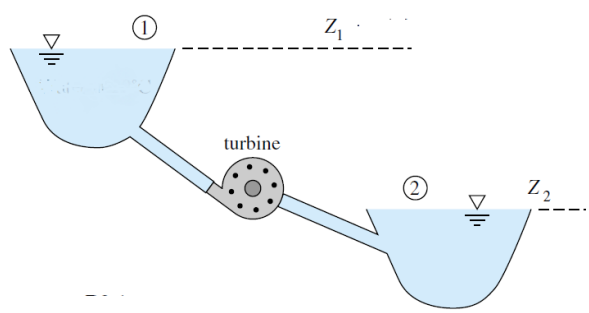

Example: Water is pumped at a rate of 180 m^3/hr to the upper reservoir as shown. Calculate the power required to drive the pump. Take pump efficiency as 70%

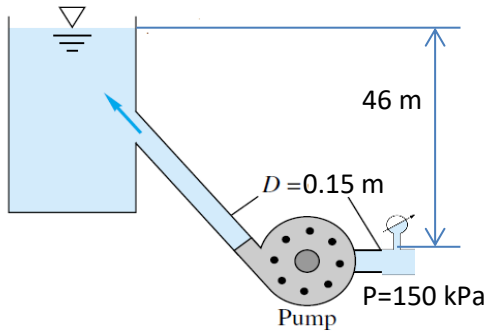

3- MOMENTUM CONSERVATION

$$\frac{dN}{dt} = \frac{\partial}{\partial t}\int_{cv} \beta\rho\, d\forall + \int_{cs} \beta\rho V \cdot dA$$

N=mV (momentum)

$$\frac{d(mV)}{dt} = \frac{\partial}{\partial t}\int_{CV} \frac{mV}{m}\rho d\forall + \int_{CS} \frac{mV}{m}\rho V.dA$$

For steady state

$$m\frac{dV}{dt} = 0 + \int_{CS} V\rho V.dA$$

$$\therefore ma = \sum F = \int_{out} V_o d\dot{m}_o - \int_{in} V_i d\dot{m}_i$$

Or

$$\sum F = \dot{m}_o V_o - \dot{m}_i V_i$$

$$F\begin{cases} Pressure\ \ force\ (P * A) \\ Reaction\ force \\ Wieght\ (sometimes) \end{cases}$$

Example: Find the horizontal force of the water on the horizontal bend shown in figure.

APPLICATION OF MOMENTUM EQUATION ON MOVING VANES

Bernoilli between 1 and 2,

$V_1 = V_2$

$V_1 = V_j - V_b$

where:

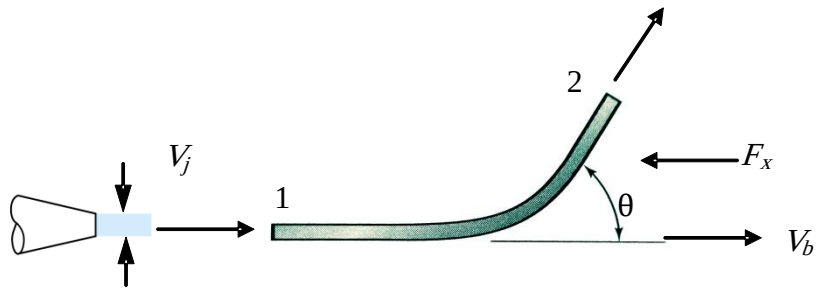

V_1: relative velocity (velocity of jet relative to the vane)

V_j : Jet or (Nozzle) velocity

V_b: vane (or blade) velocity

In vane application, the mass flow rate is calculated as follow:

1- $\dot{m} = \rho A_j V_j$ For multi vanes (turbine)

2- $\dot{m} = \rho A_j (V_j - V_b)$ for single vane

Example: The vane shown in figure moves to the right at 30 m/s. the jet velocity is 80 m/s. determine (a) the force components needed to support the vane (b) the absolute velocity at the exit, and (c) the power generated by the vane.